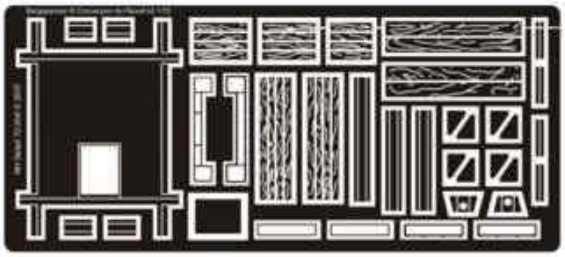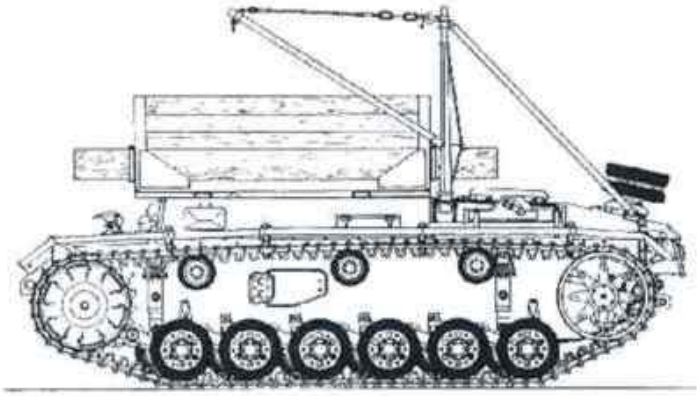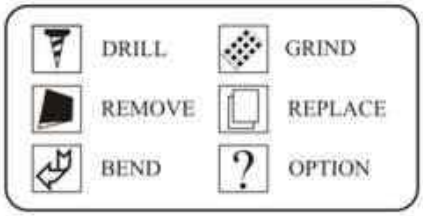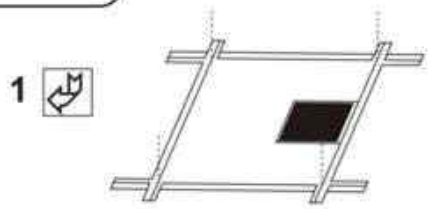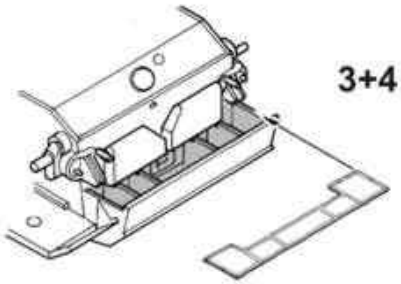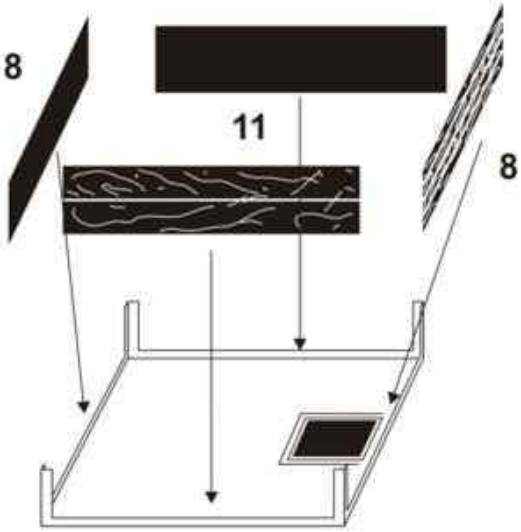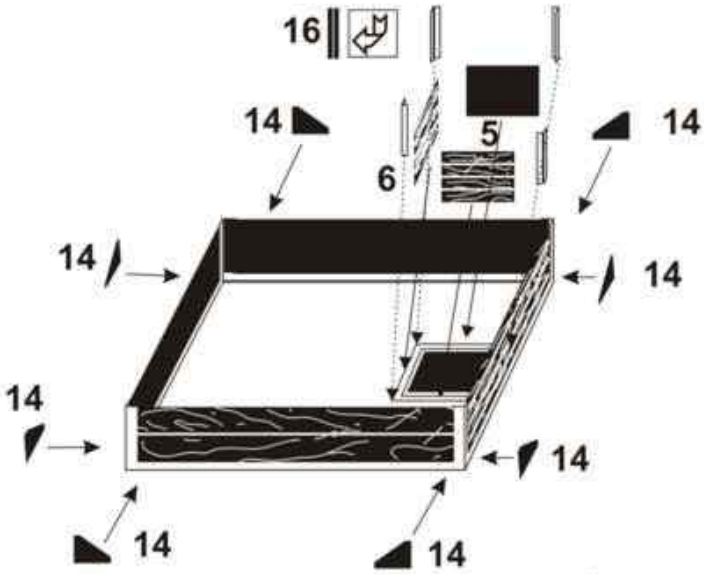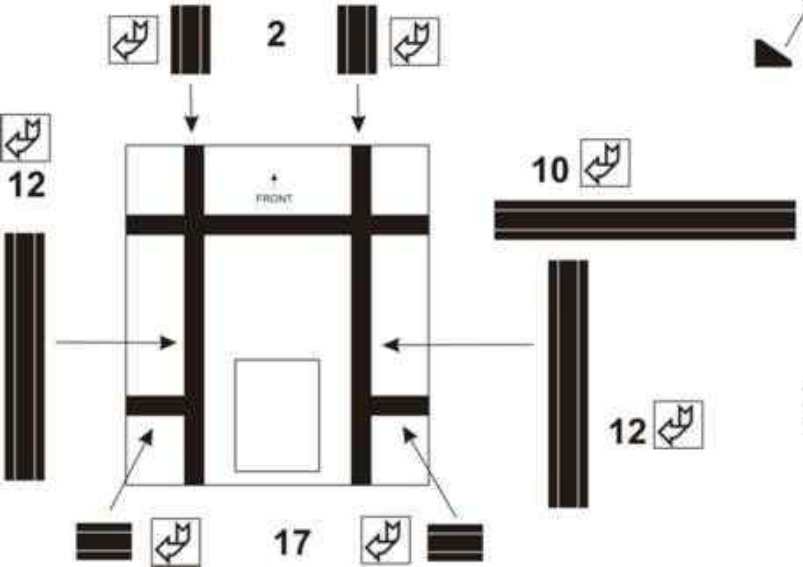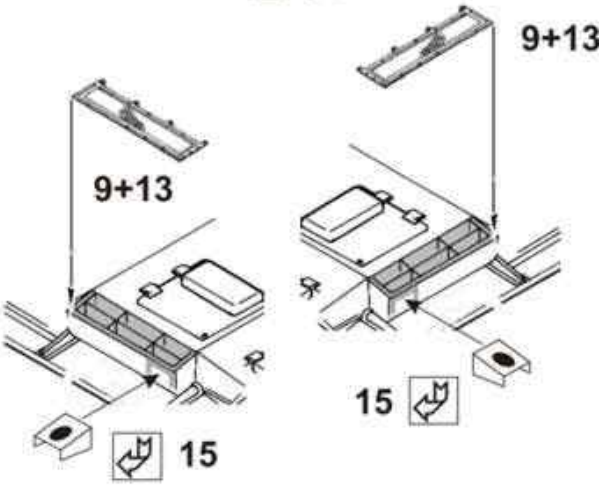NH Detail cat.№ 72-004 Bergepanzer III Conversion Set for Revell 1/72